FRANK GmbH * Starkenburgstraße 1 * D-64546 Mörfelden-Walldorf
Telefon +49 (0) 6105 / 4085-0 * Telefax +49 (0) 6105 / 4085-270 * www.frank-gmbh.de

Butterfly valve type 57

Body material / disc[1]	PVC-U	PP	PP / PVDF[2]
Sealing material (optionally)	• EPDM	• CSM • FKM	• FKM-F
Working temperature[3]	0 °C up to 50 °C[4]	-20 °C up to 80 °C[4]	-20 °C up to 120 °C[4]
Nominal size	DN 40 up to DN 350		
Connection with pipe	Sandwich valve with connection dimensions acc. to DIN EN 1092-1 (replaces DIN 2501) - PN 10[5] Lug type see type 57 L		
Length	Company standard		
Actuator	Lockable lever with 19 positions (DN 40 up to DN 200), or infinitely variable gear, Optionally pneumatic or electric actuator		
Accessories	Limit switches, shaft extension		

[1] for lug type: body material PDCPD
[2] Body (not medium contacted) PP, disc PVDF
[3] Designed for 10 years of use with a neutral medium (water)
[5] also acc. to ANSI or JIS available

[4] Working temperatures for sealing materials:

EPDM:	-20 up to 90 °C
CSM:	-20 up to 80 °C
FKM / FKM-F:	-5 up to 120 °C

Example for an invitation to tender text:

Butterfly valve type 57, DN 150, PN 10, PVC-U / EPDM, sandwich valve with connection acc. to DIN EN 1092-1 - PN 10 with infinitely variable lever and optical position indicator

Document: *FRANK_DB_L2_Absperrklappe Typ 57a_05-2020_EN*

Butterfly valve type 57

DN 40 up to DN 200

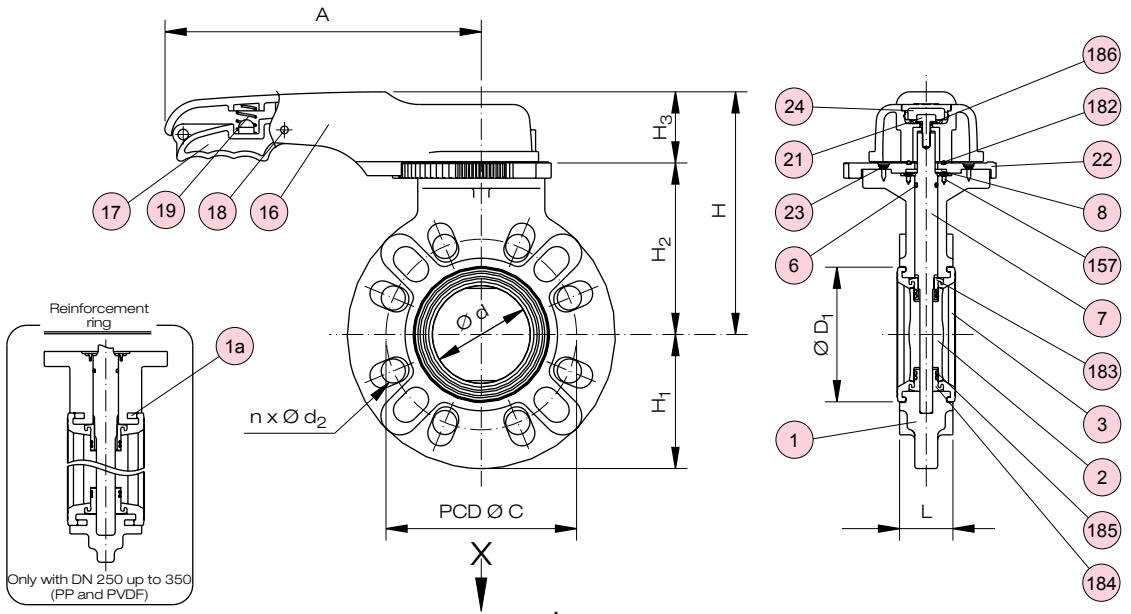

DN 40 up to DN 350

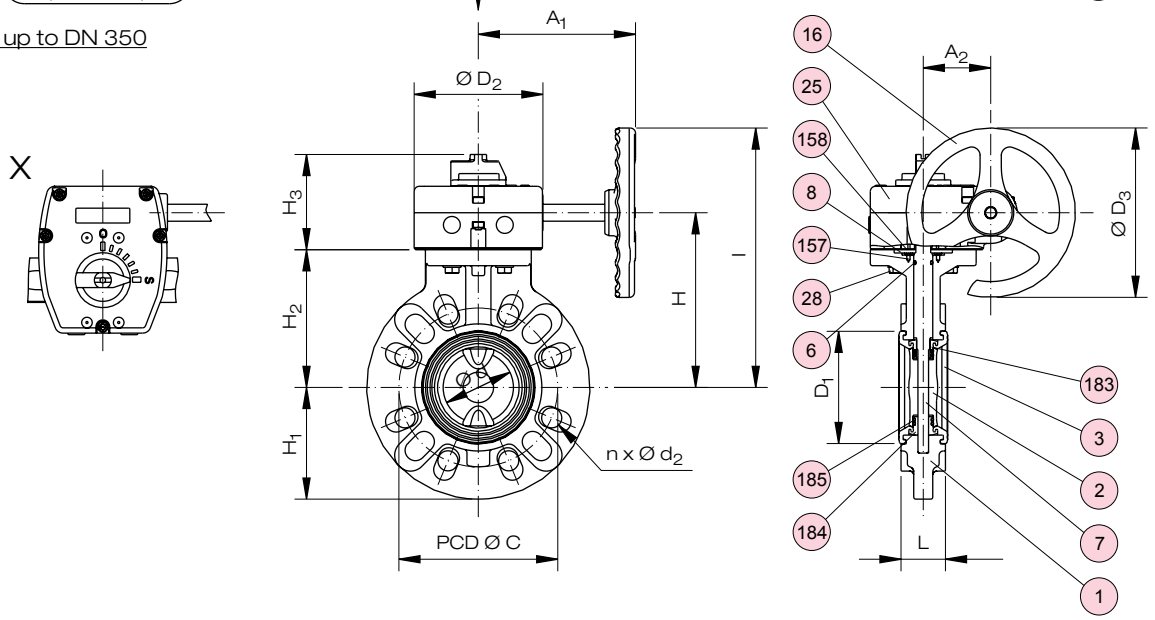

Top flange dimensions in [mm] for fixation and actuator mounting (DIN EN ISO 5211)

DN	Type	C_1	h_1	d_1	D_4	S
40	F07	70	30	9	14	11
50	F07	70	30	9	14	11
65	F07	70	30	9	14	11
80	F07	70	30	9	17	14
100	F07	70	30	9	17	14
125	F10	102	35	11	21	17
150	F10	102	35	11	21	17
200	F10	102	35	11	24	19
250	F10	102	35	11	27	22
300	F14	140	45	18	34	27
350	F14	140	45	18	34	27

Top flange

Profile 1 - 1:

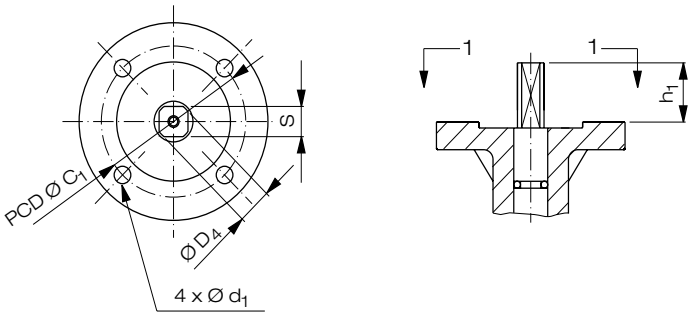

Butterfly valve type 57

No.	Description	Number	Material
1	Body	1	PVC-U, PP, PP (disc-PVDF)
1a	Reinforcement ring[1)]	1	A2 - 1.4301 (SUS 304)
2	Disc[*)]	1	PVC-U, PP, PVDF
3	Seat[*)]	1	EPDM, CSM, FKM, FKM-F
6	O-ring (C)[*)]	1	EPDM, CSM, FKM, FKM-F
7	Stem	1	1.4000 (SUS 410 S)[2)]
8	Stem retainer	1	PP
16	Lever / handwheel[3)]	1	PP
17	Hand lever	1	PPG
18	Pin	1	PPG
19	Spring	1	A2 - 1.4301 (SUS 304)
21	Hexagonal bolt (A)	1	A2 - 1.4301 (SUS 304)

No.	Description	Number	Material
22	Locking plate	1	PPG
23	Screw (B)	4	A2 - 1.4301 (SUS 304)
24	Cap (A)	1	PP
25	Gear box	1	PDCPD
28	Hexagonal bolt	4	A2 - 1.4301 (SUS 304)
157	Screw	4	A2 - 1.4301 (SUS 304)
158	Sheet gasket[4)]	1	EPDM
182	O-ring[*)]	1	EPDM
183	Seat bush (A)[*)]	1	PVC-U, PP, PVDF
184	Seat bush (B)[*)]	1	PVC-U, PP, PVDF
185	O-ring[*)]	4	EPDM, CSM, FKM, FKM-F
186	Washer/Rubber	1	A2 - 1.4301 (SUS 304) with EPDM

[*)] Wearing parts
[1)] only with DN 250 up to 350 (PP, PVDF)
[2)] other material on request
[3)] Lever type with inserted stainless steel stem connector 1.4404 (SUS 316L)
[4)] only for gear box type

Dimensions and weights

Dimensions in mm																					
								Hand lever				Gear with handwheel							Weight in kg / pc[5)]		
DN	d	C	D_1	D_2	L	H_1	n x d_2	A	H	H_2	H_3	A_1	A_2	I	H	H_2	H_3	D_3	PVC-U	PP	PVDF
40	45	110	71	122	39	75	4 x 18	220	156	100	56	167	64	210	130	95	92	160	1,2 / 3,3	1,1 / 3,1	1,4 / 3,4
50	56	125	81	122	42	83	4 x 18	220	166	110	56	167	64	220	140	105	92	160	1,4 / 3,4	1,2 / 3,3	1,6 / 3,6
65	69	145	95	122	46	93	4 x 18	220	176	120	56	167	64	230	150	115	92	160	1,6 / 3,7	1,4 / 3,6	1,8 / 4,0
80	77	160	105	122	46	106	8 x 18	250	191	135	56	167	64	245	165	130	92	160	1,8 / 3,8	1,6 / 3,6	2,1 / 4,2
100	102	180	134	122	56	119	8 x 18	250	206	150	56	167	64	260	180	145	92	160	2,5 / 4,5	2,0 / 4,0	3,0 / 5,2
125	129	210	169	122	66	132	8 x 18	320	237	168	69	167	64	275	195	160	92	160	4,9 / 5,7	4,0 / 5,6	5,5 / 7,0
150	150	240	190	122	71	143	8 x 22	320	252	183	69	167	64	290	210	175	92	160	6,0 / 7,2	4,6 / 6,2	7,5 / 8,6
200	195	295	242	122	87	170	8 x 22	400	283	214	69	167	64	321	241	206	92	160	9,0 / 11,0	7,4 / 8,9	11,0 / 12,7
250	250	350	302	188	112	211	12 x 22	-	-	-	-	242	99	426	283	241	108	300	- / 18,5	- / 12,2	- / 21,5
300	303	400	360	188	129	244	12 x 22	-	-	-	-	242	99	490	340	298	108	300	- / 26,5	- / 24,0	- / 32,5
350	351	460	393	188	129	270	16 x 22	-	-	-	-	242	99	517	367	325	108	300	- / 30,0	- / 26,3	- / 38,5

[5)] Lever type / gear type

Flow rate characteristic value[6)] k_{VS} in m^3/h

	Opening degree			
DN	25 %	50 %	75 %	100 %
40	1,2	12	34	61
50	2,1	21	58	103
65	4,3	43	119	213
80	5,1	51	143	256
100	8	80	225	402
125	14	142	397	709
150	19	188	526	940
200	43	427	1197	2137
250	66	660	1848	3300
300	97	974	2728	4872
350	110	1100	3082	5504

[6)] Definition k_{VS}-value see chapter T2 / technical information

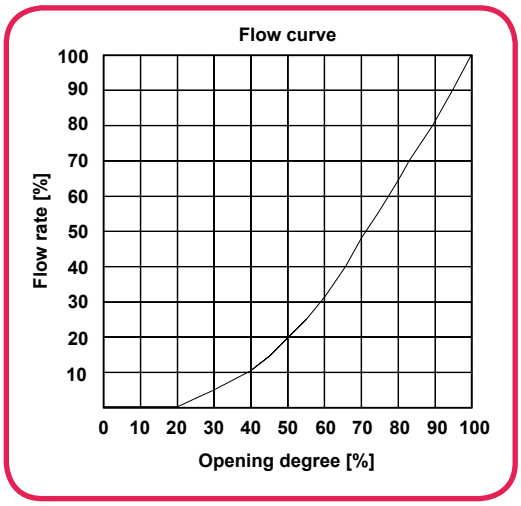

Butterfly valve type 57

Tightening torque in Nm for flange bolts

DN	Torque
40	20
50, 65	22,5
80, 100	30
125, 150	40
200, 250	55
300, 350	60

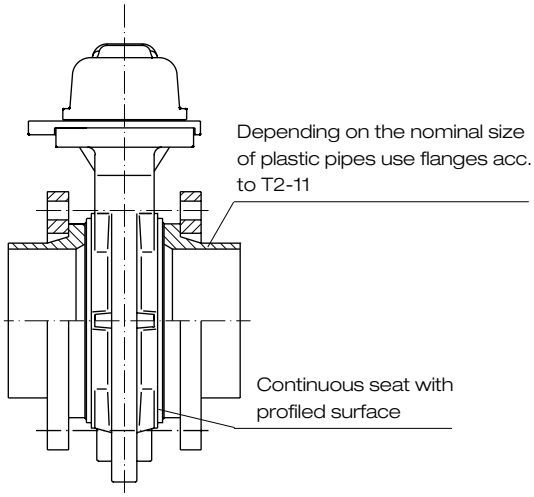

Working pressure[1] p_B in bar

Body material	Temp. in °C	DN 40 - 150	DN 200 - 250	DN 300 - 350
PVC-U	0 up to 50	10	10	7,5
PP	-20 up to 60	10	10	7,5
	up to 80	7	6	4
PVDF	-20 up to 60	10	10	7,5
	up to 80	7	6	4
	up to 120	5	4	2

[1] Definition see chapter T2 / technical information

Operating torque[2] in Nm

DN 40	50	65	80	100	125	150	200	250	300	350
9	12	25	30	40	65	69	215	350	520	860

[2] Referring to maximum working pressure

Hydrostatic bursting pressure[3] in bar

DN 40	50	65	80	100	125	150	200	250	300	350
147	147	147	118	118	98	78	74	69	54	54

[3] Referring to maximum working temperature

Vacuum resistance[4] in bar

DN 40	50	65	80	100	125	150	200	250	300	350
1,0	1,0	1,0	1,0	1,0	1,0	0,91	0,91	0,91	0,85	0,85

[4] Referring to maximum working temperature

Butterfly valve type 57

Pressure loss diagram

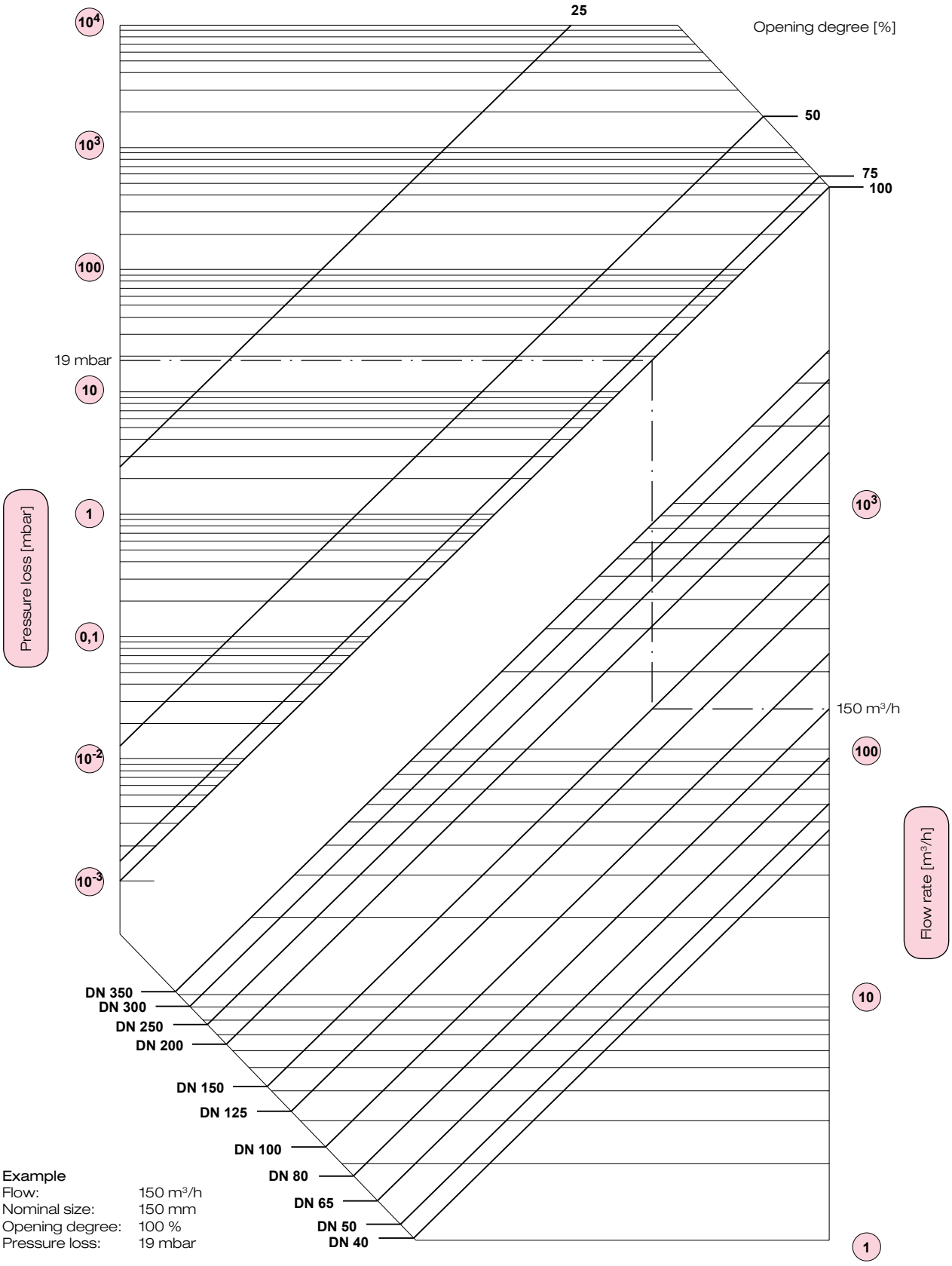

Butterfly valve type 57

Maintenance and installation

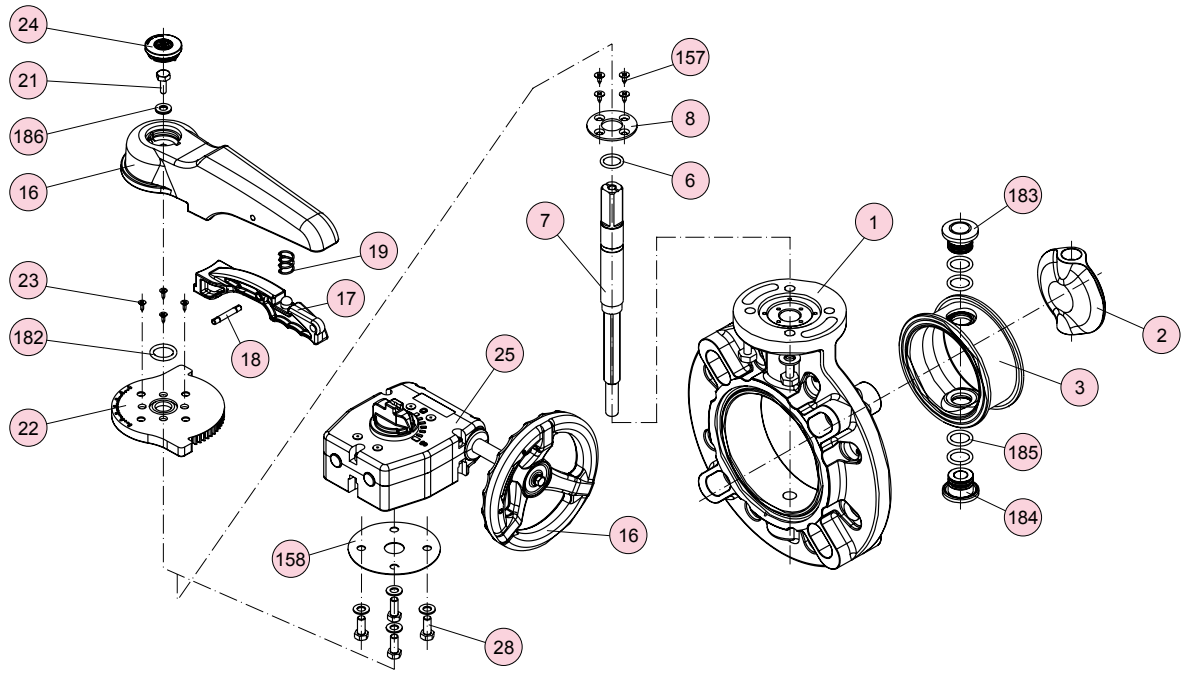

Lever or gear version

Disassembly of the valve

Caution: *Never dismantle the valve when the pipe is under pressure.*

- Drain fluid completely from the pipeline.
- Leave the valve slightly opened.
- Loosen the connecting bolts and nuts.
- Remove the valve from the pipeline.

Lever version:

- To take off lever **16**, firstly take off cap **24** by using a screw driver and release bolt **21** by using a socket wrench, then pull up the lever **16** while holding handle lever **17**.
- Remove bolts **23** and remove locking plate **22**.

Gear version:

- Remove bolts **28** and remove gear box **25**.

Lever and Gear version:

- Remove bolts **157** and remove stem retainer **8**.
- Pull the stem **7** out of the body **1**.
- Push disc **2** with seat **3** out of the body **1**.
  For this shift 90° to rotating axis the lever between body and seat (disc open). Via the lever, press seat with disc out of the body.
- Remove seat bush **183** and **184**.

Assembly of the valve

- The valve assembly is to be performed in reverse order to the disassembly.
- Before the assembly all parts have to be checked for damages.
- All parts have to be clean.
- For installation of seat **3** with disc **2**, it is absolutely necessary to ensure that:
  - the seat bush **183** and **184** are correctly assembled.
  - the seat has to be put in correct position (seat bush **183** with the bigger hole must be directed to the top flange.
- For installing the disc **2**, press the seat **3** and together install the disc between the seat bush **183** and **184**.
- The stem is to be mounted in a way that its top mark complies with the disc position.
- After assembly carry out a pressure test acc. to DIN EN 12266-1.

Notes for correct installation

- Because of the full cover seat additional flange gaskets are not necessary.
- Install the valve without invoking material stress, therefore be aware of flange face parallelism, axial misalignment and valve length.
- For use with media containing solids or sediments the valve should be installed with the stem in horizontal position and the disc opening in flow direction.
- Depending on the size chamfered stub flanges according T2-11 have to be used.
- For using butterfly valves DN150 with stub flanges d180 bigger SDR 17 please use chamfered stub flanges.